System No. C-AJ-1198

F Ratings - 2 and 3 Hr (See Items 2, 3D, 3E and 4B)
T Rating - 0 Hr
L Rating At Ambient - Less Than 1 CFM/Sq Ft
L Rating At 400F - Less Than 1 CFM/Sq Ft
W Rating - Class 1

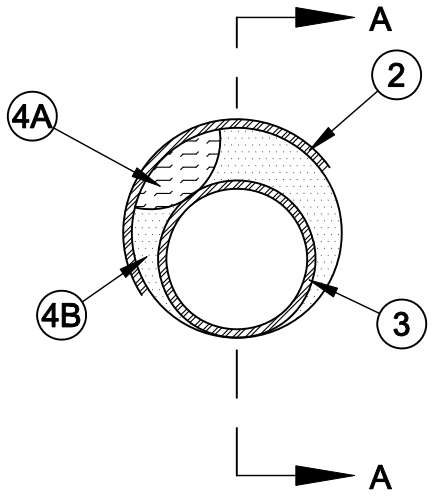

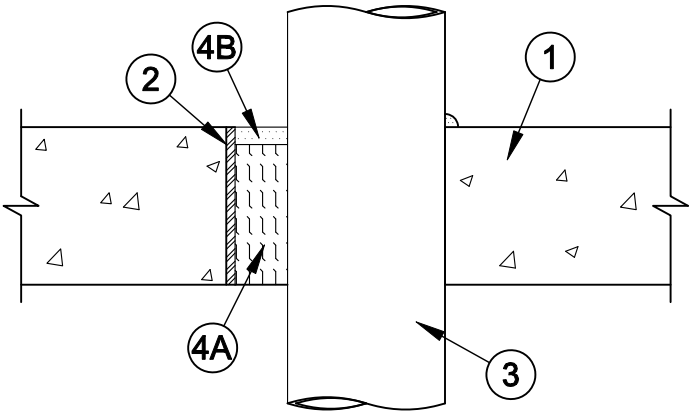

Section A-A

1. **Floor or Wall Assembly -** Min 4-1/2 in. (114 mm) thick reinforced lightweight or normal weight (100-150 pcf or 1600-2400 kg/m3) concrete floor or min 5 in. (127 mm) thick reinforced lightweight or normal weight concrete wall. Wall may also be constructed of any UL Classified **Concrete Blocks***. Floor may also be constructed of any UL Classified hollow core **Precast Concrete Units***. Max diam of opening is 7 in. (178 mm) when floor is constructed of hollow-core precast concrete units. Otherwise, max diam of opening is 26 in. (660 mm).

   See **Concrete Blocks** (CAZT) and **Precast Concrete Units** (CFTV) categories in the Fire Resistance Directory for names of manufacturers.

2. **Steel Sleeve -** (Optional, Not Shown) - Max 14 in. (356 mm) diam Schedule 10 (or heavier) steel pipe sleeve or max 14 in. (356 mm) diam No. 26 ga (or heavier) sheet steel with square flange spot-welded to the sleeve near its midheight and sized to be a min of 2 in. (51 mm) larger than the OD of the through penetrant. Sleeve cast or grouted into floor or wall flush with both surfaces of floor or wall. **When steel sleeve is used, F Rating of firestop system is 2 Hr.**

3. **Through Penetrant -** One metallic pipe, conduit or tubing to be installed either concentrically or eccentrically within the firestop system. The annular space between pipes, conduits or tubing and periphery of opening shall be min 0 in. (0 mm, point contact) to max 2-1/4 in. (57 mm). Pipe, conduit or tubing to be rigidly supported on both sides of floor or wall assembly. The following types and sizes of metallic pipes, conduits or tubing may be used:

   A. **Steel Pipe -** Nom 24 in. (610 mm) diam (or smaller) Schedule 10 (or heavier) steel pipe. **When steel sleeve is used, the max pipe diam is 12 in. (305 mm).**

   B. **Iron Pipe -** Nom 24 in. (610 mm) diam (or smaller) cast or ductile iron pipe. **When steel sleeve is used, the max pipe diam is 12 in. (305 mm).**

   C. **Conduit -** Nom 4 in. (102 mm) diam (or smaller) steel electrical metallic tubing, nom 6 in. diam (or smaller) rigid steel conduit or nom 1 in. diam (or smaller) flexible steel conduit.

FOR CANADIAN APPLICATIONS:
When evaluated in accordance with ULC-S115, this system has the following ratings:

System No.	Rating Hr.			
	F	FT	FH	FTH
C-AJ-1198	2 & 3	0	2 & 3	0

For more information, please see the XHHW7.R14288 section in the UL Fire Resistance Directory entitled Fill, Void or Cavity Materials Certified for Canada.

Specified Technologies Inc. 210 Evans Way Somerville, NJ 08876

Reproduced courtesy of Underwriters Laboratories, Inc.

Created or Revised: October 09, 2009

(800)992-1180 • (908)526-8000 • FAX (908)231-8415 • E-Mail:techserv@stifirestop.com • Website:www.stifirestop.com

D. **Copper Tubing -** Nom 6 in. (152 mm) diam (or smaller) Type L (or heavier) copper tubing. **When max 6 in. (152 mm) diam copper tubing is used, F Rating is 2 hr. When max 4 in. (102 mm) diam copper tubing is used, F Rating is 3 hr. When steel sleeve is used, the max copper tubing diam is 4 in. (102 mm).**

E. **Copper Pipe -** Nom 6 in. (152 mm) diam (or smaller) Regular (or heavier) copper pipe. **When max 6 in. (152 mm) diam copper pipe is used, F Rating is 2 hr. When max 4 in. (102 mm) diam copper pipe is used, F Rating is 3 hr. When steel sleeve is used, the max copper pipe diam is 4 in. (102 mm).**

4. **Firestop System -** The firestop system shall consist of the following:

A. **Packing Material -** Min 4 in. (102 mm) thickness of min 4 pcf (64 kg/m3) mineral wool batt insulation firmly packed into opening as a permanent form. Packing material to be recessed from top surface of floor or from both surfaces of wall to accommodate the required thickness of fill material. **When floor is constructed of hollow-core precast concrete units the packing material is to be flush with the bottom surface of the floor and extend through the thickness of the floor except for the recess required at the top surface of the floor to accommodate the fill material.**

B. **Fill, Void or Cavity Material* - Sealant -** Fill material applied within the annulus, flush with top surface of floor or with both surfaces of wall. At the point contact location between penetrating item and concrete, a min 3/8 in. (10 mm) diam bead of fill material shall be applied at the concrete/penetrating item interface on the top surface of floor and on both surfaces of wall. When steel sleeve is used in concrete floor, a thin film of fill material shall be applied to cover edge of sleeve and to lap a min of 1/2 in. onto concrete. **A min 1/4 in. (6 mm) thickness of sealant is required in the annulus for the 2 hr F Rating. A min 1/2 in. (13 mm) thickness of sealant is required in the annulus for the 3 hr F Rating.**

SPECIFIED TECHNOLOGIES INC - Pensil 300 Sealant or SpecSeal Series SIL300 Sealant for floors or walls and Pensil 300 S/L Sealant or SpecSeal Series SIL300SL Sealant for floors only.

*Bearing the UL Classification Mark

FOR CANADIAN APPLICATIONS:
When evaluated in accordance with ULC-S115, this system has the following ratings:

System No.	Rating Hr.			
	F	FT	FH	FTH
C-AJ-1198	2 & 3	0	2 & 3	0

For more information, please see the XHHW7.R14288 section in the UL Fire Resistance Directory entitled Fill, Void or Cavity Materials Certified for Canada.